Chapter Three

Composting & Vermicomposting

1. Introduction

Composting can be described as the ultimate in recycling. It mimics the natural cycle of fallen leaves and branches decomposing into **humus**. To compost, the organic material that has been generated is gathered and treated in a way which hastens its biological decomposition.

What is "Organic?"

Anything that is alive or once was alive is "organic." All plants and animals, anything made from plants or animals, and any wastes generated by plants and animals are organic.

Organic products are an important part of the economy and of everyone's life. Some of the common organic materials that are used and disposed of daily include food, paper products like tissues, and yard waste.

As Figure I-4 in Chapter 1 illustrates, organic materials account for much of what is consumed and thrown away every day. Paper products alone make up over 19% of human waste. In total, organics make up 52% of the waste stream! What are ways to manage the sheer volume of organic wastes produced?

Manage Organic Materials at Home

People have a variety of options and must make decisions about what is most appropriate for their unique situation. The decision depends on what materials are available, how much time and effort a person is willing to spend, the space available, costs, aesthetic considerations, and what options are available. To make these decisions, one must be familiar with the entire range of home composting methods and the types of materials and maintenance styles best suited to each of these systems.

Step one in selecting a management strategy for organic materials generated at home is to understand the available options. When solid waste management priorities are applied to organic materials, the following hierarchy of options results:

Terms introduced in this chapter include:

Organic
Grasscycling
Mulching
Composting
Holding units
Turning bins
Anaerobic
Vermicompost
Eisenia fetida
Top dressing
Bacteria
Carbon to Nitrogen Ratio

- **Source Reduction** - Reducing the amount of yard debris through landscaping strategies and practices.
- **Reuse** - Composting of materials for reuse on site.
- **Recycling** - Collection of organic materials for processing and marketing by centralized composting facilities.

2. Source Reduction

Source reduction principles can be used to reduce the amount of yard debris generated. But what options are there for the wastes that come out of yards and gardens? When autumn comes, one cannot decide that the leaves won't fall.

However, it can be a choice to reduce organic materials generated at home. The choices are fewer than the multitude of choices made at the supermarket, but the process is the same and the results can be just as impressive.

Determine Needs

There are three main questions to ask about how yard debris is generated to determine if one "needs" to be producing so much waste.

•*How is the yard used?* The use affects the amount of space devoted to high-maintenance/ high waste-producing components, such as lawn and annual flower beds, as opposed to low-maintenance plantings or paved areas.

•*Is the level of maintenance provided essential for plant health and a reasonable appearance of the yard?* The amount of yard debris created can be reduced by mowing, watering, and fertilizing less.

•*What materials can be put to use at home that are currently being disposed?*

Identify Alternatives

A number of steps can be taken to reduce the amount of organic wastes generated in home landscapes. The alternatives range from simple changes in maintenance procedures to complete re-landscaping of yards to create self-sustaining composting systems.

Landscape Waste Reduction Strategies

Grasscycling

Grass clippings are the largest single component of landscape waste in most yards. Yet it is actually healthier for the lawn to leave the clippings on the lawn than to remove them. It makes mowing quicker and easier. When grasscycling, it is best to mow every 5 to 7 days in warm seasons. However, in wet weather, it is inefficient to leave the clippings on the lawn.

Letting clippings remain on the ground returns nutrients to the lawn, adds organic matter to rejuvenate the soil, conserves moisture, and saves time and money on bagging. **Grasscycling** does not contribute to build-up of "thatch," which is an accumulation of dead roots and stems.

It helps to have a lawn mower that is designed to "mulch" grass clippings back into the turf. Mulching mowers, now widely available, recirculate the clippings through the blades, chopping them into tiny pieces and blowing them down into the grass. Other mowers may be adapted by modifying the outlet spout to direct clippings down rather than out. Reel-type mowers are also effective at cutting the clippings small enough so that they are not conspicuous when left on the lawn. They are also a great way to reduce pollution! A gasoline lawn mower running for one hour emits the same amount of pollution as 40 new automobiles running for one hour. New reel mowers are light, quiet, relatively maintenance-free, and they don't blow exhaust. More information about reel mowers is available at www.reelmowerguide.com.

During periods of fast growth and wet weather, grasscycling may require more frequent cuttings to avoid heavy deposits of clippings. When not bagging the clippings, each mowing can take half the time.

Mulching

Mulching conserves water and protects soil from erosion and compaction. Many common yard clippings make excellent mulches or soft "paving" for paths and play areas. Grass clippings, leaves, and pine needles are all suitable for mulching landscapes. Wood chips from pruning and removing trees are a natural substitute for "Beauty Bark." This material can often be obtained at no cost by calling a tree service.

Yard debris mulches can be applied following the same methods described for using compost as mulch (*See Figure III-7)*. Annual flower and vegetable gardens can be mulched with non-woody materials that break down quickly and tilled under without competing with plants for nitrogen. If woody materials, such as sawdust or wood chips, are used in an annual garden, they must be pulled aside before tilling, or they must be balanced by adding a high-nitrogen fertilizer such as blood meal when tilled in.

Trees and shrubs can be mulched with one-half to one-inch layers of grass clippings, or with two- to four-inch layers of wood chips, twigs or pine needles. If layers of fine green materials are too thick they can mat down, becoming anaerobic and acting as impenetrable barriers to both air and water.

Selective Fertilization and Watering

Selective use of fertilizers and water, applied at the correct time in proper amounts, actually makes lawns healthier and more tolerant of stress and produces less waste. Lawns should be fertilized in autumn and winter to encourage strong

root development. These strong rooted plants will grow evenly through the summer with less water. Healthy lawns in the *Puget Sound* region need only one inch of water per week during dry summer months. Measuring irrigation rates allows watering only as much as necessary.

Turn in Crop Wastes

At harvest time, crop wastes from annual vegetable and flower gardens can be chopped or tilled into the soil. This returns nutrients and organic material to soil.

Spring crops will decompose quickly if cut when they are still succulent, or nitrogen fertilizer can be added to speed decomposition. Fall crop wastes can be turned in or left roughly cut on the surface to protect soil from erosion and compaction, then tilled in with fertilizers a few weeks before spring planting. Diseased or insect-infested plants should not be turned in.

Lawn Size Reduction

Reducing lawn size produces less debris and conserves fertilizer, water, labor, and other resources. Lawns produce more waste and require more maintenance than any other landscaping.

Low-maintenance groundcovers or woodland gardens where fallen leaves are naturally recycled produce less waste. These can be used to replace grass in low-traffic areas. In many cases, ground covers will be healthier and more attractive than lawns grown in less than optimum conditions, and they require less work to stay attractive. Some common, quick-growing, low-maintenance ground covers include St. Johnswort (Hypericum perforatum), Rubus calycinoides "Creeping Raspberry," creeping thyme varieties, beach strawberry (Fragaria chiloensis), and barren strawberry (Waldsteinia Willd.). Many low and spreading shrubs also provide interesting alternatives to lawn.

Areas used heavily as paths or play areas can be replaced by mulch or wood chips. To create a low-maintenance, long-lasting path or play area, remove the sod and lay down two or three overlapping layers of corrugated cardboard to suppress weed growth. Cover the cardboard with four to six inches of chip; it will compact as it is walked on.

Eco-lawns are another option. Many species of grasses are appealing for lawns but some are more environmentally friendly than others. Some require less water, fertilizer, and mowing. Other eco-lawns have a mix of plants including grasses, clover, and strawberry so they still provide an appealing, green ground cover but are more healthy because of the diversity. Resources are available online.

Natural Landscapes

Many people replace high-maintenance lawns and shrubs with more natural-looking wooded areas or wildflower meadows. An initial thick layer of wood chip or other yard debris helps to create the woodland look and reduce watering, weeding, and other maintenance. These woodlands areas also provide a place to use grass clippings, leaves, needles, and other trimmings as mulches. Meadow areas (probably away from the street or borders with neighbors) can be seeded with wildflowers and pasture grasses with attractive seed heads. These meadows are attractive when left unwatered and unmowed, or only mowed once each summer after flowering.

3. Reuse Organics and "Buy Recycled"

Sometimes major changes in the layout of a garden or maintenance plan are not possible. In these cases, it is important to carefully select landscaping practices to reduce waste. Some general criteria to use in selecting yard debris management options include:

- Reducing or reusing as many materials as possible at home (or on site at public facilities). On-site reuse or composting is the most efficient landscape waste management option.
- Using organic materials diverted from other sites whenever possible to meet landscape needs. Consider trading unwanted plants or plant divisions with neighbors and friends. Always try to reuse wastes, such as wood chips and animal manures, before purchasing new materials that would provide the same service.
- Buying compost and mulch products made

from recycled yard debris for potting mixes, soil amendments, and other garden needs.

4. Recycling Organic Materials

Recycling organic materials in most cases means composting. Landscape trimmings and food scraps can be composted at home. There are also commercial alternatives to composting at home.

A. Commercial Composting

There are two commercial composting collection methods presently in use in Linn and Benton Counties: self-haul to commercial composters and curbside collection.

1) Advantages and Disadvantages of Centralized Composting

Home composting is not practical for everyone. Curbside collection and recycling of yard debris is a sensible alternative for those who do not have the time or space to make compost. Centralized composting is also useful for processing materials that are difficult to handle at home, such as brush and woody prunings. The controlled high-temperature composting conditions at centralized facilities can assure a high-quality product from problem materials such as invasive weeds and diseased plants.

A major disadvantage of centralized composting is the expense, effort, and environmental degradation of hauling raw materials to a central location for composting, then hauling material back in the form of finished compost.

2) Collection

Many methods are used to collect yard debris, offering varying levels of convenience and expense. Typically, there is a trade-off between convenience of the collection system and its cost.

Self-Haul to a Compost Facility

Self-haul collection systems require individuals to take separated yard debris to a composting facility. Small fees are charged. Time and hauling costs can cut the savings in dumping fees for commercial landscapers if the facility is more than a few miles from a job site. In addition, self-haul systems require the use of a truck for large loads of yard debris.

Linn and Benton County residents can self-haul compost to the Process and Recovery, PRC, located near the Coffin Butte Landfill.

Curbside Collection

Curbside collection of yard debris is the most convenient collection method for residents and the most effective in diverting large volumes of yard debris from the waste stream. It is also the most expensive. In Linn County, curbside collection became available in the summer of 1993. Benton County began their program around the same time.

Wheeled carts are provided for residents to deposit yard debris. Only “clean” yard debris should be set out for collection. This includes the following:

- Grass clippings
- Leaves
- Brush which is in containers or Bundled
- Small branches

In 2010, it became possible for Corvallis residents to include all food waste in their carts yard debris carts. **NO** garbage, rocks, soil, or other non-organic materials are allowed.

Plastic bags are not allowed in any curbside collection programs. They are difficult to remove and are a contaminant in the finished compost. “Biodegradable” plastic bags are not allowed either, as they are not all truly biodegradable and they complicate the processing of the material. Many communities promote the use of sturdy Kraft paper bags which are readily available and compost easily.

3) Commercial Compost Facilities

The collection system affects the design of a processing facility. The types and amounts of specific materials are some of the main factors considered. Commercial composting uses three major steps: preprocessing, active composting, and postprocessing.

Preprocessing

Preprocessing begins with receiving, inspecting,

and sorting the materials. Removing contaminants is important to making high-quality compost. Some contaminants like rocks, logs or tire rims can seriously damage composting equipment. Sorting yard debris controls the materials that go directly to the composting area. This saves wear and tear on shredding equipment. Large materials are shredded to decrease breakdown time. Many types of chipping and shredding equipment are available for size reduction.

Active Composting

In this phase, bacteria and other composting critters feast on the yard debris. Commercial processors can use a variety of methods and technologies -- some slow, some fast -- to break down the material. The methods vary in:

- level of technology used,
- attention paid to managing and monitoring the operation,
- space required,
- length of time needed to obtain finished product, and
- ability to combine other organic materials with the yard debris.

Some processors use low-level technology, simply making huge piles of debris several stories tall or long windrows of material, letting everything compost slowly over one or two years.

Low-level composting demands more space per volume of debris, but the savings in equipment and personnel costs may be substantial.

The middle range of technology involves constructing and turning long windrows of decomposing materials. Windrow sizes vary widely, but are typically five to ten feet wide, four to eight feet high, and hundreds of feet long. The equipment used to turn windrows ranges from front end loaders to specialized machinery designed exclusively for turning compost windrows. These operations create and maintain windrows that will achieve high temperatures, allowing thermophilic bacteria to do the main composting work in as little as four to six weeks. Then the windrows are combined into large curing piles that are allowed to cool until the compost is stable, or mature.

The highest levels of commercial composting technology employ composting digesters, computerized aeration and turning systems, and sophisticated odor control systems.

Postprocessing

Compost producers depend on a wide variety of end users, or markets, for their compost, and they may tailor their postprocessing activities for particular users. Postprocessing activities prepare the finished compost for final use through screening, other grading methods, and packaging. Screening removes contaminants and uncomposted materials, including rocks, large wood chips, sticks, and large plastic items. Some operations, usually developed or heavily subsidized by municipalities, simply give their compost away to make room for the next batch. These operations do little or no postprocessing. More often, operations produce compost in order to compete in the soil products markets. For these producers, the compost must be screened to remove contaminants and materials that have not decomposed.

In addition to screening compost, producers may blend their compost with sand, peat moss, or other materials to create soil mixes for special uses. If producers hope to sell primarily through retail outlets to home gardeners, they will package the compost into bags.

4) Regulations

The Department of Environmental Quality has regulations that apply to commercial composting operations. Local zoning and land-use laws cover the siting of composting facilities.

Composting operations may also be regulated by local air and water pollution agencies, which are concerned with dust, waste water, and odors.

B. Home Composting

Composting at home is far more efficient than collecting and transporting organic materials to a centralized facility and then back to a home garden as a mulch or soil amendment. The best market for the finished product is right in one's own back yard.

Some people begin composting to cut down on the amount of waste in their garbage can. Others are motivated by a desire to use the compost produced. Composting is an excellent waste reduction technique because it keeps organic material out of the waste stream entirely.

Compost improves the structure of the soil. The soil is easier to work, has good aeration and water retention characteristics, and an increased resistance to erosion. Compost also helps hold elemental plant nutrients until plants are ready to use them. Soils improved by added compost are more likely to produce healthy plants able to resist disease and insect attacks.

1) Basic Compost Farming

Composting can be thought of as microorganism farming. Just as a good farmer keeps in mind the basics of soil, season, pests, and climate when growing a crop, a good composter focuses on the materials being composted and the climate around them to ensure a healthy compost crop.

Almost any combination of yard wastes left out in the weather will decompose eventually. Understanding how to create the ideal conditions described here will help in making compost quickly and help to diagnose and solve composting problems.

a. Compost Materials

Anything organic--leaves on the ground, a fallen tree, or a wood-framed house--will decompose. The more resistant the material is to decay, however, the longer the process will take. Except in some special situations, decomposition is inevitable! A total absence of air, such as in a peat bog, will prevent decomposition. In very dry places, such as within the Antarctic, decomposition may be slowed. But everything organic that is out in the weather around Western Oregon will eventually become compost.

Fallen leaves, grass clippings, sod stripped for a garden, weeds, squash vines, watermelon rinds--even old cotton rags--all come from once-living organisms and can be composted.

A diversity of materials is the key to a first-rate compost. In addition to the major plant nutrients such as nitrogen, phosphorus, and potassium, plants take up a host of minor and trace elements. The more diverse the materials composted, the more likely it is that these elements will be returned to the plants. This does not mean that the materials will compost more quickly or more thoroughly, but that they will feed the plants better.

b. Non-Compostable Organic Materials

Everything that was once alive will compost. However, not everything belongs in a compost pile. Some materials that create problems and should be kept out of home compost systems are listed in *Table III -2.*

Managing Animal Wastes

The only acceptable ways to dispose of cat and dog feces is to flush them down the toilet or bury them in the ornamental areas of the garden. Pet wastes should not be composted with food or yard wastes.

Dog, cat and bird feces can carry pathogens that are dangerous to people, so they should be handled as little as possible. These wastes should be buried in ornamental garden areas only, where they will be undisturbed for at least two years.

Pet wastes should not be buried within 100 feet of a domestic water well, lake, or stream. A pit 2- to 3-feet deep, covered securely with a heavy board, can serve as a burial area for one or two pets over an extended period of time. A little soil, sawdust, peat moss or compost should be thrown on top of each deposit. When the hole is filled to within 1 foot of the surface, it should be filled with soil and a new pit should be started.

Burial is only recommended for small amounts of pet wastes.

2) Composting Systems

a. The Basics

The basic components necessary for composting are air, water, and food. The process of composting can be as simple or as complex as one wants to make it. Passive composting can be simply making a pile of materials and letting them break down slowly. Active composting involves paying attention to the amounts and

types of materials and turning the pile frequently.

There are three crucial components to composting. To live, the microorganisms that make decomposition happen need the same basic things as humans—oxygen, water, and nutritious food. Turning or mixing the compost occasionally will get oxygen into the pile. While the microorganisms need water, if they have too much water, they will drown. A good rule of thumb is that compost should be as wet as a wrung out rag. And lastly, those microorganisms need the right nutrients in their food. Most things composted are either brown or green. Brown material, like fallen leaves, are very high in carbon. Green materials are a rich nitrogen source. A healthy compost pile needs both types of materials. Microorganisms need 30 times more carbon than nitrogen so adding more brown materials makes a compost pile function best. A more in-depth discussion of the science of composting is included later in this chapter.

b. Criteria for Selecting a Compost System

There are many ways to make compost. Home compost methods range from mulched paths that are replenished every other year, to turning units that are maintained weekly. Many compost systems can be built with scavenged materials, some require nothing but the soil in a garden, and others cost over $300.

Composting systems are organized by the type of wastes they process: yard wastes are composted by using them as mulches or in holding and turning units; vegetative kitchen food wastes are composted either through soil incorporation or in worm bins. Turning units also may be used to compost kitchen and yard waste together in a hot pile for those willing to turn the piles regularly. Usually, food wastes should be composted in closed systems separately from yard wastes to keep rodents and other pests from becoming a problem in the open, longer-standing yard waste composting systems. Yard wastes are generally not susceptible to pest problems, so they may be composted in a variety of open systems. The style depends on what materials are to be recycled, how much space is available, when compost is needed, and what it will be used for.

c. Composting Yard Wastes

Yard wastes can be composted in simple **holding units** where they will sit undisturbed for slow decomposition, in **turning bins** that produce finished compost in as little as a month, or as **mulches** on paths or around planting until they decompose in a year or two.

Holding units are simple containers used to store yard and garden waste in an organized way until the materials break down. Using a holding unit is the easiest way to compost. It requires no turning or other labor except placing wastes into a pile or bin as they are generated.

Non-woody materials such as grass clippings, garden weeds, crop wastes, and leaves work best in these systems. Decomposition can take from six months to two years. However, the process can be sped up by chopping or shredding wastes, mixing green and brown materials, and maintaining proper moisture.

Since materials are continuously added to holding units, they are at various stages of decomposition. Generally, the more finished compost is at the bottom of the pile, while partially decomposed materials are near the top. Once it is determined that finished compost is at the bottom of a holding bin or pile, the compost is ready to be harvested and used. (Finished compost is somewhat of a personal judgment. It should look like mulch, have a nice earthy smell, and not be changing very much.) To harvest the compost, the holding unit is removed from the compost pile and placed next to it. Yard wastes are then forked from the top of the old pile into the bottom of the empty holding unit until rich compost is found. The compost can be used and the holding unit is ready to receive additional yard wastes.

Holding units can be made of light materials so they may be easily taken apart and moved around the garden. Some examples of holding units include circles of snow fencing or hardware cloth, old wooden pallets lashed together, or wire framed in wood. More permanent holding areas can be made by stacking cinder blocks or mortaring bricks or rocks together. It is helpful to have two of these stationary bins, one to use for fresh wastes while the other is curing.

Sod also can be composted in a holding system, with or without a structure. Simply pile freshly stripped sod roots up, grass down. Make sure it is thoroughly wet, and cover with black plastic to keep light out. Sod takes one to three years to decompose completely. Decomposition of sod piles can be shortened to as little as six months by adding a high-nitrogen fertilizer such as cottonseed meal or ammonium sulphate. Covered piles are also an effective way to kill quack grass and some other noxious weeds.

Turning Units are typically a series of bins used for building and turning hot compost piles. An alternative turning system is a horizontally mounted rotation barrel. A turning unit allows wastes to be conveniently mixed for regular aeration. This speeds composting by providing bacteria with the air they need to break down materials. Turning systems require frequent maintenance and involve preparation of the wastes to be composted. These units can be expensive to buy or build. However, the effort and expense is rewarded with large quantities of compost produced in a short time.

Non-woody yard wastes, along with vegetable wastes from the kitchen, may be composted in turning units. Composting in these units is most efficiently done in batches. Materials should be stockpiled until enough are on hand to make a pile that fills a 3 ft. by 3 ft. by 3 ft. bin, or almost fills a barrel composter. (To reduce odors and pests, food wastes should be stored in a sealed container until enough materials are available to make a large pile.)

- Gather all the materials needed to make a pile that is at least 3 cubic feet. Use both green and brown materials to approximate the 30:1 carbon to nitrogen balance.

Table III-1. Common Compostable Organic Waste Resources

Glass clippings
Landscapers are always trying to get rid of them.
Yard Wastes
Weeds, old plants, wilted flowers
Leaves
You'll find these bagged and waiting at neighbors' curbside.
Food scraps
Except for bread, meat, fat, bones, dairy, or oily foods. They must be buried under 8" of soil, composted by earthworms, or in a hot compost pile.
Wood Chips
A tree service will deliver a load if you are willing to take a large quantity. Use first on garden paths, then compost it after the initial decay has begun.
Sawdust
This is best if first used as a livestock litter or allowed to weather, since it takes a lot of nitrogen to break it down.
Seaweed
Found washed up on some beaches. It's an excellent source of many plant nutrients.
Hair
Very high in nitrogen. Rescue some from the garbage at barber shops and beauty parlors.
Coffee grounds and filters
Almost every home and office has coffee grounds. Coffee chaff is a beautiful mulch. Available from coffee roasters.
Manures
Rabbit, cow and goat manures are the only sterile manures to use. These manures provide useful organisms.

Table III-2. Non-Compostable Organic Waste

Do **NOT** compost these materials:

Plants infected with disease or a severe insect attack where eggs could be preserved or where the insects themselves could survive in spite of the compost pile's heat (examples are apple scab, aphids and tent caterpillars).

Ivy, succulents and certain pernicious weeds such as morning glory and buttercups; and **grasses which spread by rhizomes** such as quack grass. These may not be killed by the heat of decomposition and can choke out other plants when compost is used in the garden.

Cat, dog and bird manures, which contain pathogens harmful to children. These pathogens are not always killed in the heat of the compost pile.

Meat and fish leftovers, bones, or greasy fatty foods such as oils, butter, and cheeses.

Piles made entirely of waxy leaves such as rhododendron and English Laurel, or pine needles break down very slowly. Try composting small amounts of these mixed with other materials, shred them first or use them as mulch.

- Increase decomposition rate of the materials by running them through a shredder or chop them with a spade or machete on a piece of plywood. Brown leaves may be run over with a rotary lawn mower to break them down.
- Start building the pile with a 4- to 6-inch base of brown material. If the pile is going to sit for a few weeks or more, use coarse material (small branches, corn stalks, straw) for this base layer to let air into the pile. Moisten materials.
- Next, add a 4- to 6-inch layer of green materials. If the greens are not very fresh, sprinkle on a small amount of blood meal or cottonseed meal, poultry manure, or other high-nitrogen source. Fresh grass clippings should be used in thin layers. Mix the green and brown layers together so bacteria can feed on both simultaneously.

These piles should be monitored and turned after temperatures have peaked and begun to fall, in 4 to 7 days; then turned a second time when the temperature peaks again, 4 to 7 days later. Compost processed this way will be ready in 3 weeks. Rotating barrel units do not need layering; material can be thrown in and mixed up. If rotating barrel composters are turned every 2 to 4 days, compost will be ready to use in 2 to 3 weeks.

Figure III-1. Holding unit such as these are easy to set up. The wire enclosure can be made by using a large loop of chicken wire, snow fence, or Aquamesh. To empty the bin, it is simply dismantled.

A rotating barrel composter may be made from a 55-gallon drum with a loading door cut and hinged. Aeration holes must be cut at the ends or around the barrel. A variety of rotating barrel composters is available commercially. Avoid barrel units made entirely from metal perforated with 1" holes, as they leave materials dry or clumped together. Ideally, barrel units should have flat sides, or "fins" inside to lift and drop materials as the barrel is turned.

Mulches are organic materials spread over the surface of the soil to suppress weeds, keep plant roots cool and moist, and prevent soil from eroding or compacting. Mulches are used around plants in the garden, or as a soft "paving" for paths and play areas. An ideal mulch material is one that costs nothing, is easy to keep in place, and reduces evaporation of soil moisture while permitting rapid penetration of water.

There are a great variety of organic and inorganic materials that can be used for mulching. In this manual, only organic mulches will be discussed. Some common organic materials used for mulches include: wood chips, lawn clippings, compost, sawdust, leaves from deciduous trees and shrubs, manure, and pine needles. It is also possible to mulch with commercial by-products such as coffee chaff and buckwheat hulls, or straw. The focus here will be on using organic wastes that are readily available in and around our homes.

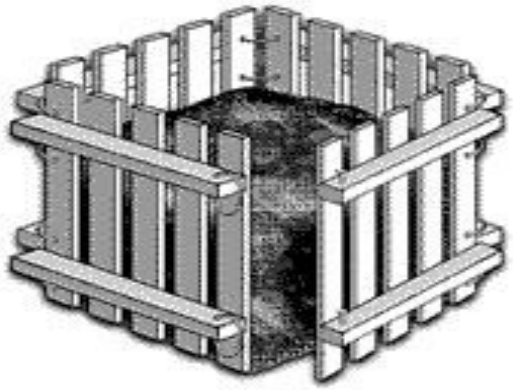

Figure III-2. Bins built from used pallets also help to keep those pallets out of the waste stream, and are a preferred bin type for hard-core recyclers. By simply building a swinging gate with the front pallet, it serves well as a turning unit.

These materials are suitable for surface mulching around trees, shrubs, and other perennial plantings. However, in annual flower and vegetable gardens, it is best to mulch with non-woody materials such as lawn clippings, compost, and other green garden trimmings. Non-woody materials break down quickly and can then be turned under without competing with plants for the nitrogen that bacteria need to break down woody wastes. If woody wastes are used in an annual garden, they should be pulled aside before tilling so that they do not use up nitrogen that plants need. If woody wastes are tilled in, they must be balanced by adding a high-nitrogen source such as blood meal.

The material most commonly used for mulching commercial landscaping is ground bark ("beauty bark"). A more natural looking alternative is the chipped waste from tree pruning and removal operations. This material can often be obtained for free by calling a tree service. If one has tree work done at home, the tree service may be willing to leave the chips. Any leaves left with the branches will decompose in a short time, adding to the beauty of the variegated mulch. Wood chip makes an excellent path and play area material, as it decomposes slowly and softens the surface.

d. Composting Food

Non-fatty food wastes may be composted by ***incorporating*** *them into the soil* where they will break down to fertilize established or future plantings, by *placing them in* ***worm bins*** that produce high quality "castings" for use on plants indoors or out, or *layering them in* ***hot piles*** along with yard wastes as described in the previous section. Food wastes incorporated into the soil can take from one month to one year to decompose fully. It takes worms three to six months to transform a bin of wastes into **vermicompost**. Hot piles can compost a mixed load of food and yard wastes in three weeks.

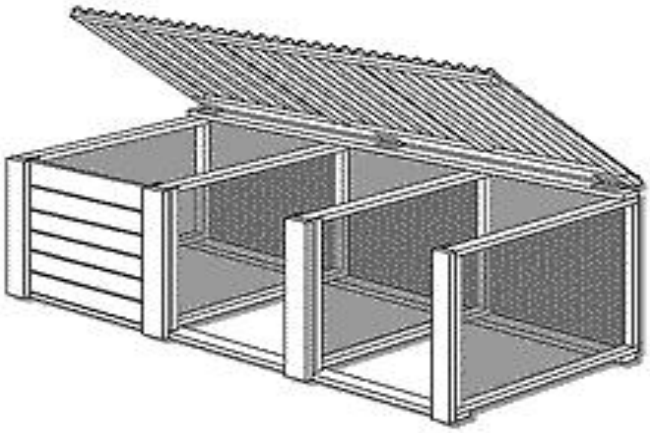

Figure III-3. 3-Bin turning unit. For the most demanding waste volumes, this type of unit allows for multi-stage composting. Fresh material is added to one bin, then turned and shoveled into the next bin. Finished compost is removed from the final bin.

Soil incorporation is the simplest method for composting food waste. A hole is dug one foot deep, and the food wastes are chopped and mixed into the soil, then covered with at least 8 inches of additional soil. (Pet wastes can also be buried in the soil as long as it is done in ornamental gardens, not vegetable gardens.)
Depending on soil temperature, the number of micro-organisms in the soil, and the carbon content of the wastes, decomposition will occur in one month to one year. Food wastes such as meat, bones, or fatty foods such as cheese and salad dressing are not recommended for soil incorporation. These foods have the potential of attracting rodents, dogs, cats, or flies.

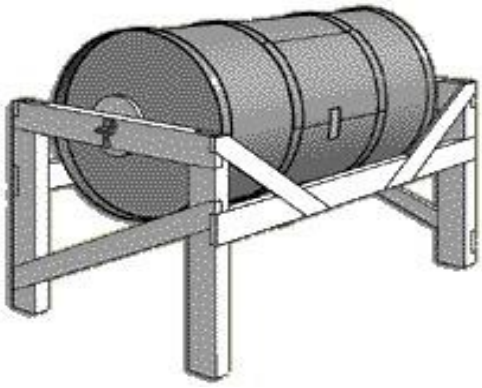

Figure III-4. Rotating barrel bin. Although more challenging to build, the enclosed bin can help where pests are a problem. Aeration is provided by simply rotating the barrel, which is easier than having to fetch a shovel or pitchfork.

Food wastes can be incorporated around the drip line of trees or shrubs by using a post hole digger or shovel. The tree roots actively feed in this

zone, and will benefit most from nutrients added there. Food wastes also may be buried in a fallow area of an annual garden, or a trench may be dug and filled with soil as food waste is added.

In English gardens a form of soil incorporation known as **"pit and trench" composting** is practiced (illustrated in *Figure III-5*). This is a simple three-year rotation of soil incorporation of kitchen wastes, growing crops, and path making. In the first season a trench is dug, filled with food wastes and covered. At the same time, another row is used to grow crops and a third is used as a path. In the second year the fertile soil of the former compost trench is used to grow crops, the former crop row is used as a path, and the path is dug as a new trench. After a third year of rotation, the cycle starts over. This form of composting keeps the garden perpetually fertile with a small organizational effort.

Anaerobic composters, such as the Gedye bin, can also be used to decompose both food and yard waste. In anaerobic composting, bacteria break down the organic material without the addition of oxygen. This type of composting retains more nitrogen while producing methane but does not reach temperatures high enough to kill weed seeds or pathogens.

Anaerobic systems usually consist of a closed bin or dark plastic bag which is filled with vegetative waste, moistened, closed, and placed in the sun for 10 to 12 weeks. To avoid animal pests it is best to cover the bottom of the composting bin with wire mesh.

Hot compost piles are the only safe way to compost food and yard wastes together without pest problems. They are also the best way to kill soil diseases and weed seeds in compost, and to produce compost in a short period. Not everyone wants or needs to make hot compost piles. Here is a recipe for those who do:

Gather all the materials needed to make a pile that is at least 3 cubic feet. Use both green and brown materials to approximate the 30:1 carbon to nitrogen balance.

- To increase decomposition rate of the materials, run them through a shredder or chop them with a spade or machete on a piece of plywood. Brown leaves may be run over with a rotary lawn mower to break them down.
- Start building the pile with a 4- to 6-inch base of brown material. If the pile is going to sit for a few weeks or more, use coarse material (small branches, corn stalks, straw) for this base layer to let air into the pile. Moisten materials.
- Next, add a 4- to 6-inch layer of green materials. If the greens are not very fresh, sprinkle on a small amount of blood meal or cottonseed meal, poultry manure, or other high-nitrogen source. Fresh grass clippings should be used in thin layers. Mix the green and brown layers together so bacteria can feed on both simultaneously.
- Continue alternating and mixing layers of green and brown materials, adding water and extra green materials as needed, until the pile is 3 to 4 feet high (fill the bin).
- Close bin or cover pile and wait.
- Monitor temperature in the interior of the pile regularly. It should peak between 120° to 160° F in 5 to 10 days.
- When the temperature begins to decrease, turn the pile. Take materials from the outer edges and top off the pile and place them at the base and middle of the new pile. Those from the middle should be on the outside edges and top of the new pile.
- Continue monitoring the temperature in the pile.
- About one week later, the temperature of the pile should peak. Turn the pile again. After another week, the compost should be finished. Piles made this way without food wastes do not need to be turned; they will be finished in 3 to 4 months.

Vermicomposting (worm bin composition) uses redworms in an enclosed container to convert vegetable and fruit scraps into a nutrient-rich soil amendment called worm castings.

Materials needed

- A container
- Bedding
- Red worms
- Kitchen scraps

Container:
The size of the container depends on the amount of waste to be composted. A worm bin can be

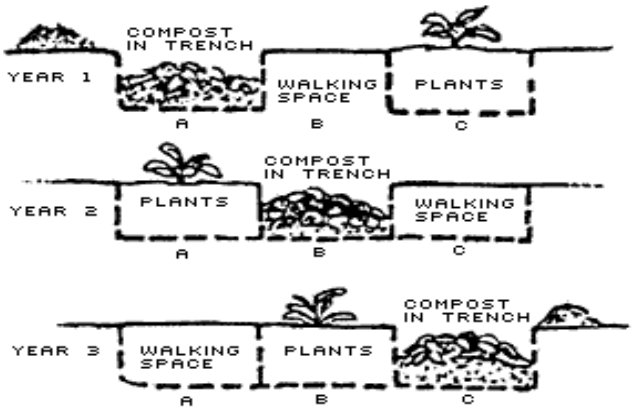

Figure III-5. Pit and trench composting.

made by using almost any container that is an appropriate size, prevents light from entering, has air vents, and is covered. Surface area is more important than depth for a worm system. Generally, one square foot of surface is required for every pound of food waste to be composted per week.

Bedding:

Suitable bedding materials include shredded newspaper or cardboard, dry leaves, straw, peat moss, and wood shavings.

Redworms:

The most popular redworm used for vermicomposting is *Eisenia fetida.* In nature, redworms are surface dwellers that live in the top layer of soil under the organic debris that is their food. By creating suitable living conditions, one can take advantage of the redworm's ability to recycle organic matter.

Worms eat half their weight in food scraps and about an equal amount of bedding each day. A bin that starts with about a 1 pound of worms will need to be fed a handful of food every other day. As worms multiply the food supply should be increased.

Kitchen scraps:

Redworms are capable of eating most kitchen scraps, but some waste is better left out of the bin to avoid odor or pest problems. ***Do not compost meats, fish, dairy products, oily foods, or cat and dog waste***.

Foods that can be added to the worm bin include:

- vegetable scraps
- fruit peels or pulp
- coffee and tea grounds and filters
- breads (without butter or mayonnaise)

Food may be cut up or ground into small pieces to speed up the process. This provides more surface area for the worms to feed on.

Worm bins are fun and an interesting way to compost non-fatty kitchen wastes. In addition, they compost the newsprint, cardboard, or other wastes used as bedding. Worm bins are most efficient if sized and stocked according to the amount of waste to be handled. Mary Appelhof's book "Worms Eat My Garbage" provides information on how to determine what size a worm bin should be, and the amount of bedding and worms required for an efficient system. Another source of information on worms and worm composting is the "Worm Digest."

3) Compost Uses

Compost is a much needed resource. It is not only useful to the home gardener, but is essential to the restoration of landscapes where topsoil has been removed or destroyed during construction or mining operations. Compost is increasingly being applied to agricultural and forest lands that have been depleted of their organic matter. The most common use of compost today is probably in topsoil mixes used in the landscape industry.

Compost is typically applied:

1. To mulch or "top dress" planted trees.
2. To amend soil prior to planting.
3. To amend potting mixes.

Mulching

Gardeners and landscapers use mulches and top dressings over the surface of the soil to suppress weeds, keep plant roots cool and moist, conserve water, maintain a loose and porous surface, and prevent soil from eroding or compacting. Compost also gives plantings an attractive, natural appearance. Compost can be used to mulch around flower and vegetable plants, shrubs, trees, and ground covers.

To prepare any area for mulching, first clear away any visible grass or weeds that might grow up through the mulch. Make sure to remove the roots of any weedy plants that spread vegetatively, such as quack grass, ivy, and buttercup. Different types of plants benefit from varying application rates and grades of mulch. Recommended uses of compost as mulch and top dressings are shown in *Figure III-7*.

Soil Amendment

Compost can be used to enrich garden soils before planting annuals, ground covers, shrubs and trees. Many commercial topsoil mixes contain composted yard debris or sewage sludge as a major component. This may be mixed with sand, sandy soil removed from construction sites, peat moss, and/or ground bark.

Soils may be amended by mixing compost topsoil mixes with existing soil. If a rich compost or topsoil mix is laid on top of the existing soil without mixing, the zone where they meet can become a barrier to roots and water. In this condition, plants often develop shallow roots and eventually blow over or suffer from lack of water and nutrients. Recommended applications for different situations are shown in *Figure III-8.*

Potting and Seedling Mixes

Sifted compost can be used to make a rich, loose potting soil for patio planters, house plants, or for starting seedlings in flats. Compost can be used to enrich purchased potting mixes or to make mixes at home.

Plants growing in containers are entirely reliant on the water and nutrients that are provided in the potting mix. Compost is excellent for container growing mixes because it stores moisture effectively and provides a variety of nutrients not typically supplied in commercial fertilizers or soil-free potting mixes. However, because of the

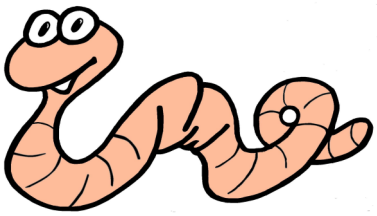

Figure III - 6.
Fun Facts About Worms

- There are more than 3,500 species of earthworms worldwide, including red worms.
- Each worm has five pairs of hearts and a simple brain.
- The average worm is made up of 100 to 200 ringed segments.
- A worm can grow a new head or tail if some of its segments are nipped off.
- Worms have no teeth or eyes but have highly sensitive skin.
- Worms breath through their skin.
- A worm can eat about half its own weight in food scraps every day.
- An enlarged cummerbund-like band near the worm's head holds the reproductive organs.
- Each worm is both male and female (hermaphroditic).
- Worms exchange sperm to reproduce and each produces an egg (cocoon) from which 2 to 4 baby worms emerge.
- Eight breeding worms can become 1,500 worms in 6 months.
- Each healthy worm may produce an egg capsule every 7 to 10 days. These capsules incubate for 14 to 21 days.
- The baby worms will mature to breeding age in 2 to 3 months.
- A healthy red worm can live from 7 to 10 years and grows to about 3 inches.

Source: City of Eugene Solid Waste & Recycling Program and OSU Lane County Extension Service

limits of the container, it is essential to amend compost-based potting mixes with a "complete"

fertilizer to provide an adequate supply of macro nutrients (N-P-K). Simple "recipes" for making your compost mixes are shown in *Figure III-9.*

4) Troubleshooting

The troubleshooting chart, *Table III-4,* is based on information found in the book *Home Composting Made Easy* by C. Forrest McDowell and Tricia Clark-McDowell, and *The Incredible Heap: A Guide to Compost Gardening* by Stu Campbell.

5) Why Composting Works- Technical Information

Chemical and biological factors affect the decomposition of organic materials.

a. The Life Cycle of a Heap

The decomposition and recombining of various forms of plant and animal life (**organic matter**) create compost. Inseparable from these dead residues are the living microorganisms that decompose, or digest, them. The length of the process depends on several factors: **density** of the material, amount of **surface area** exposed, **balance of carbon and nitrogen**, and environmental conditions such as moisture, air, and temperature. These factors, in various combinations, set the stage for the cast of characters--bacteria, fungi, millipedes, earthworms, and other living inhabitants of the compost pile--and determine the speed at which these characters perform.

The process of decomposition is a very complex but natural one. There are many organisms that are responsible for the breakdown of organic matter. Although most are not seen by the human eye, they are there throughout the process. Others that are large enough to see are usually associated with the later breakdown stages.

Not all bugs are bad. In fact, all bugs play a role in nature. Many compost pile organisms eat other organisms and turn them into compost. At least one-third of the volume in a compost pile is made up of the dead, decomposed bodies of soil

Table III-3. Compostable Food Wastes

CAN BE Composted	CAN *NOT* BE Composted
Apples	Butter
Apple peels	Bones
Cabbage	Cheese
Carrots	Chicken
Celery	Fish scraps
Coffee grounds/filters	Lard
Egg shells	Mayonnaise
Grapefruit	Meat scraps
Lettuce	Milk
Onion peel	Peanut butter
Orange peel	Sour cream
Pears	Vegetable oil
Pineapple	Yogurt
Potatoes	
Pumpkin shell	
Squash	
Tea leaves and bags	
Tomatoes	
Turnip leaves	

organisms. Still, a compost pile shouldn't allow in any old bugs.

First time composters may be surprised by the size and complexity of the community of small organisms residing in a compost pile. These organisms, which include many insects, bugs, slugs, bacteria, and fungi, form what is called a "food web" (*Figure III-10).* In the food web, each organism has a job to do in turning organic waste into dark, crumbly finished compost.

The food web decomposition process includes:

- Level One - primary consumers. Organisms that shred organic matter and the microscopic organisms that eat the shredded organic residues.
- Level Two - secondary consumers. Organisms that eat level one organisms.
- Level Three - tertiary consumers. Organisms that eat level two organisms.

All members of the compost food web are very beneficial to a compost pile and should be left alone to do their work. They need each other to survive. If any of the member organisms are removed by using insecticides, their natural cycle is disrupted and the compost is contaminated with insecticide residues.

Level One - Primary Consumers

This level is made up of herbivores: bacteria, fungi, actinomycetes, nematodes, mites, snails, slugs, earthworms, millipedes, sowbugs, and worms. Note that some types of mites are carnivores.

The most productive members of a compost pile's food web are the bacteria, which are chemical decomposers. As a group, they can eat nearly anything. Some are so adaptable that they can use more than a hundred different organic compounds as their source of carbon due to their ability to produce a variety of enzymes. Usually, they can produce the appropriate enzyme to digest whatever material they find themselves on.

Every piece of organic matter placed in the pile is covered with varying amounts of bacteria. As they digest the organic material and break it down into its basic elements, they are also reproducing at an incredible rate. One gram of bacteria can become about 450 grams of bacteria in only three hours.

There are many kinds of specialized bacteria operating in different temperature ranges.
Psychrophilic bacteria work best in temperatures of about 55 degrees F, but can stay on the job even in near freezing conditions. This is why a compost pile sinks in the winter; these bacteria are busy breaking down organic matter. As these cooler bacteria go to work, their activity actually begins to heat up the pile.

The increased temperature creates the ideal conditions for the next type of bacteria to arrive.

Mesophilic bacteria work best in temperatures of about 70 degrees F to 90 degrees F, but can stay on the job in even hotter conditions. The activity of mesophilic bacteria can heat the pile up to temperatures greater than 110 degrees F.

Thermophilic bacteria become active when the temperature reaches between 104 degrees F to 200 degrees F. If a compost pile steams in the morning or on a frosty day, it's because these bacteria are busy at work decomposing the organic waste. These bacteria generally last for up to five days and then the pile begins to cool.

As the psychrophiles eat away at organic matter, they give off a small amount of heat. If conditions are right for rapid growth, this heat will be sufficient to set the stage for the mesophiles. In many compost piles, these efficient mid-range bacteria do most of the work. However, given optimal conditions, they may produce enough heat to kick in the real hot shots–the thermophiles.

Although at first they are the most active decomposers, the bacteria are not alone in all of this work. Other microbes, fungi, and a host of invertebrate decomposers also take part. Some are active in the heating cycle, but most other organisms prefer the cooler temperatures of later decomposition.

After temperatures go down, the decomposing pile becomes a real zoo. Larger organisms, many of them feeding on the piles' earlier inhabitants, add diversity to the action.

Actinomycetes produce grayish cobwebby growths (molds) throughout the compost that give the pile a pleasing, earthy smell, similar to a rotting log. They are frequently seen in drier parts of the pile and survive a wide range of temperatures.

Fungi send their thin mycelial fibers out far from their spore-forming reproductive bodies. Molds are actually a form of fungi. The presence of mold and fungi usually implies decay. The most common of these pop up on a cool pile. Fungal decomposition is less efficient than bacterial decay as cold temperatures greatly restrict its growth.

Snails, slugs, millipedes, sow bugs, pill bugs, mites, and earthworms are the larger invertebrates that shred the plant materials, creating more surface area for action by the microscopic fungi, bacteria, and actinomycetes, which are in turn eaten by organisms such as mites and springtails. These creatures all excrete "castings" that are very dark and fine, and great for your plants.

Snails are terrestrial mollusks, typically having a spirally coiled shell, broad retractile foot, and distinct head. They generally feed on living plant material but will attack fresh garbage and plant debris.

Slugs are basically snails without the shell. They too feed on living plant material, fresh garbage, and plant debris, and will also show up in the compost heap.

Millipedes are nonpoisonous arthropods with cylindrical bodies of 20 to 100 segments, with two pairs of legs per segment. They feed mainly on decaying plant tissue but will also eat insect carcasses and excrement.

Sow Bugs are fat bodied crustaceans with delicate plate-like gills along the lower surface of their abdomens which must be kept moist. They move slowly, and feed on rotting woody materials and highly durable leaf tissues, such as the woody veins. The sow bugs that roll up like armadillos are known as pill bugs.


Sow Bug

Pill bugs look similar to sow bugs and also graze on decaying vegetation, but are more flexible. They can roll themselves into a ball to protect themselves, which gives them their common nickname: "roly polys."


Pill Bug

Mites are the second most common invertebrate found in compost. They are transparent-bodied creatures with eight leg-like jointed appendages. Some can be seen with the naked eye and others are microscopic. Some scavenge in leaves, rotten wood, fungi, and other organic debris. Others are predators and feed on nematodes, eggs, insect larvae, and other mites and springtails. Considered pests in fermenting industries such as wineries and cheese factories, they are not pests in the compost pile.

Worms play an important part in breaking down organic materials and forming finished compost. As redworms process organic materials, they coat their wastes with a mucus film that binds small particles together into stable aggregates and prevents nutrients from leaching out with rainwater. These stable aggregates give the soil a loose and well draining structure. Earthworms pull organic materials into the mineral soil along many burrows. As a result of the worm's well-deserved reputation for being excellent decomposers, many people think that it's a great idea to add extra worms to their compost pile. This is unnecessary. Let the worms find their own way into the pile, when the conditions are right. They prefer the pile when it is cooler, so adding worms could lead to their quick demise in a hot, steamy pile.

Level Two - Secondary Consumers

This level includes both herbivores and carnivores: nematodes, protozoa, rotifers, soil flatworms, springtails, some types of mites, and feather-winged beetles.

Nematodes, or roundworms, are tiny, cylindrical, and often transparent microscopic worms who are the most abundant invertebrates in the soil. Typically less than one millimeter in length, a handful of decaying compost can contain several million nematodes. Under a magnifying lens, nematodes resemble fine human hair. They can be classified into three categories: 1) those that eat decaying vegetation, 2) those that are predators on other nematodes, bacteria, al-

gae, protozoa, etc., and 3) those that can be serious pests in gardens where they suck the juices of plant roots, especially root vegetables. Though there are pest forms of nematodes, most of those found in soil and compost are beneficial.

Protozoa are the simplest form of animal organism. Even though they are single-celled and microscopic in size, they are larger and have more complex activities than most bacteria. Protozoa obtain their food from organic matter in the same way bacteria do, but because they are present in far fewer numbers than bacteria, they play a much smaller part in the composting process.

Rotifers are minute worms, which usually have one or two groups of vibrating cilia on the head. Their bodies are round and divisible into three parts: a head, trunk, and tail. Many forms are aquatic and are generally found in films of water. The rotifers in compost are found in water that adheres to plant substances where they feed on microorganisms.

Flatworms are, for the most part, general scavengers that graze on a wide variety of things, including animal matter. As their name implies, flatworms are flat and usually quite small in their free-living form. Most flatworms are carnivorous and live in films of water within the compost structure.

Springtails, along with nematodes and mites, are extremely numerous in compost. They are very small wingless insects and can be distinguished by their ability to jump when disturbed. They run in and around the particles in the compost and have a small spring-like structure under the belly that catapults them into the air when the spring catch is triggered. They feed mainly on fungi, although they also eat nematodes and small bits of organic debris. They are a major population controlling factor on fungi.


Springtail

Feather-winged beetles are the smallest of all beetles and possibly of all insects. These beetles are distinguished by their feather-like wings. Some are blind and most live under bark in forests and woodland. Not surprisingly they go unnoticed. Most species feed on fungi.


Feather-winged beetle

Figure III - 7.
Using compost as Mulch

On Flower and Vegetable Beds:
- Screen or pick through compost to remove large, woody material. They are less attractive, and will compete for nitrogen if mixed into the soil.
- Apply ½ to 1 inch of compost over the entire bed, or place in rings around each plant extending as far as the outermost leaves. Always keep mulches a few inches away from the base of the plant to prevent damage by pests and disease.

On Lawns:
- Use screened commercial compost, or sift homemade compost through a ½ inch or finer mesh. Mix with an equal amount of sand or sandy soil.
- Spread compost/sand mix in ¼ to ½ inch layers after thatching or coring and before reseeding.

On Trees and Shrubs:
- Remove sod from around trees and shrubs as far as branches spread. If this is impractical, remove sod in a circle a minimum of 4 feet in diameter around plants.
- Use coarse compost or material left after sifting. Remove only the largest branches and rocks.

For Erosion Control:
- Spread coarse compost, or materials left after sifting, in 2- to 4-inch deep layers over entire planting area or in rings extending to the drip line.
- Mulch exposed slopes or erosion prone areas with 2 to 4 inches of coarse compost.

Level Three - Tertiary Consumers

This level is made up of carnivores, or physical decomposers, and includes centipedes, predatory mites, rove beetles, ants, spiders, pseudoscorpions, and earwigs. Most of these creatures function best at medium or mesophilic temperatures, so they will not be in the pile at all times.

Wolf Spiders are truly wolves of the soil and litter micro-communities. They build no webs, merely run freely hunting their prey, which include all sizes of arthropods, from mites to centipedes.

Centipedes are found frequently in soil micro-communities. Centipedes are flattened, segmented worms with 15 or more pairs of legs–one pair per segment. They hatch from eggs laid during the warm months and gradually grow to their adult size. They feed only on living animals, especially insects and spiders.

Mites are related to ticks, spiders, and horseshoe crabs because they have six leg-like jointed appendages. Some mites are small enough to be invisible to the naked eye, while some tropical species are up to half an inch in length. Mites reproduce very rapidly, moving through larval, nymph, adult, and dormant stages. They attack plant matter, but some are also second-level consumers, ingesting nematodes, fly larvae, other mites, and springtails.

Rove Beetles are the most common beetles in compost. While feather-winged beetles feed on fungal spores, the larger rove beetles prey on other insects. Beetles are easily visible insects with two pairs of wings, the more forward-placed of these serving as a cover or shield for the folded and thinner back-set ones that are used for flying. These beetles prey on snails, insects, and other small animals. The black rove beetle is an acknowledged predator of snails and slugs. Some people import them to their gardens when slugs become a garden problem.

Ants feed on a variety of material, including aphid, honeydew, fungi, seeds, sweets, scraps, other insects, and other ants. Compost provides some of these foods, and also provides shelter for nests and hills. Ants will remain only while the

Figure III-8.
Using Compost as Soil Amendment

In Flower and Vegetable Beds and Ground Covers:
- Dig or till base soil to a minimum depth of 8-10 inches.
- Mix 3 to 4 inches of compost through the entire depth. For poor soils, mix an additional 3 inches of compost into the top 3 inches of amended soil. In established gardens, mix 2 to 4 inches of compost into the top 6 to 10 inches of soil each year before planting.

On Lawns:
- Till base soil to depth of 6 inches.
- Mix 4 inches of fine textured compost into the loosened base soil.

Planting Trees and Shrubs:
- Dig or till base soil to a minimum depth of 8 to 10 inches throughout planting area, or an area 2 to 5 times the width of the root ball of individual specimens.
- Mix 3 to 4 inches of compost through the entire depth. For poor soils, mix an additional 3 inches of compost into the amended topsoil.
- Do not use compost at the bottom of individual planting holes or to fill the holes. Mulch the surface with wood chips or coarse compost.

Figure III-9.
Using Compost in Potting Mixes

For Starting and Growing Seedlings in Flats or Small Containers:
- Sift compost through a mesh ½ inch or finer.
- Mix 2 parts sifted compost, 1 part coarse sand and 1 part Sphagnum peat moss. Add ½ cup of lime for each bushel (8 gallons) of total mix. Use liquid fertilizers when true leaves emerge.

For Growing Transplants and Plants in Larger Containers:
- Sift compost through 1 inch mesh or remove larger particles by hand. Mix 2 parts compost, 1 part ground bark, perlite, or pumice, 1 part coarse sand, and 1 part loamy soil or peat moss. Add ½ cup of lime and ½ cup of 10-10-10 fertilizer for each bushel (8 gallons) of mix. (An organic fertilizer alternative can be made from ½ cup blood meal or cottonseed meal, 1 cup of rock phosphate, and ½ cup of kelp meal.)

pile is relatively cool. Ants prey on first-level consumers, and help benefit the composting process by bringing fungi and other organisms into their nests. The work of ants can make compost richer in phosphorus and potassium by moving minerals from one place to another.

Pseudoscorpions are predators that seize victims with their visible front claws, then inject poison from glands located at the tips of the claws. Pseudoscorpians are so small, their prey include tiny nematode worms, mites, larvae, and small earthworms.

Pseudoscorpion

Earwigs are large predators, easily seen with the naked eye. They move about quickly. Some are predators, others feed chiefly on decayed vegetation.

Earwig

Source: California Integrated Waste Management Board (2005) "Critters in Your Pile;" http://www.calrecycle.ca.gov/organics/homecompost/Microbes/Default.htm

b. Unwanted Guests: The Pests of the Pile

Given a comfortable or nourishing environment, pest species will show up to "get in on the ac-

Table III - 4. Troubleshooting Compost Piles

PROBLEM	SYMPTOM/CAUSE	SOLUTION
Compost pile does not heat up	Too Wet: compost materials are soggy; not enough air.	Turn the pile, adding dry absorbent material (carbon or "brown") like straw or corn stalks
	Too Dry: not enough moisture.	Moisten pile without saturating it.
	The pile is damp and warm right in the middle, but nowhere else. Pile is not decomposing.	Turn pile, adding nitrogen-rich materials such as manure, grass clippings, fresh leaves, or vegetable or fruit wastes.
Ammonia smell	Too much nitrogen (green matter such as grass clippings) in the pile or the pile is too alkaline (possibly too much limestone added).	If nitrogen problem: turn pile and add more carbon (brown) material. If alkaline related: turn pile and add acid material like sawdust, oak leaves, or vegetable scraps.
"Rotten Egg" smell	Pile is too wet and there isn't enough oxygen.	Turn pile to aerate it and add dry carbon (brown) materials to absorb excessive moisture
The center is dry and contains tough, woody wastes.	Not enough water in pile. Too much woody material.	Turn and moisten; add fresh green wastes; chop or shred.
Pests (rats, raccoons, fruit flies, etc.)	Rodents and raccoons are attracted to meat and fatty food scraps like cheese and other dairy products.	Remove meat/fatty foods from pile. Turn pile to increase temperature. Balance carbon to nitrogen ratio. Use rodent-proof bin; keep lid on, put ¼-inch wire mesh on bottom or sides and insure air venting holes are less than ½-inch diameter.
	Flies, gnats, etc. are attracted to uncovered wastes, especially fruits, melons, and vegetables.	Don't leave exposed! Mix or cover with carbon (brown) materials, finished compost, or some soil.
The pile is damp and sweet-smelling, but will not heat up.	Lack of nitrogen in pile. Compost is done!	Mix in fresh grass clippings or nitrogen fertilizer.

Questions and Answers About Composting

Do I need a bin to make compost?
No, organic matter will eventually decompose without human help. But a container of some sort will keep your pile neat, protect it from the weather and pests, and make the job of tending it much easier.

Where is the best place to put a compost pile?
Pick a sheltered spot, out of the full summer sun if possible. Avoid trees and shrubs that may push their roots up into the pile. Give some thought to both convenience and appearance when choosing a location.

What is the "laziest" way to compost yard wastes? Food wastes?
Woody or "brown" yard wastes, like tree trimmings and autumn leaves, can be shredded and used as mulch around plants and on paths. Eventually they'll return to the soil. Food wastes, as well as green yard wastes like grass clippings, can be dug into the ground. Use larger-scale "soil incorporation" only where you won't be planting for a few months.

Can I compost in the winter?
Even research teams on the South Pole have composted their garbage successfully! You can retain heat a little longer in the fall by covering the pile and insulating the container, perhaps with bags of leaves. Increasing the amount of green material or using a compost activator may help keep the temperature up. Keep adding to the compost through the winter: it may not seem to be doing much, but the frozen materials will quickly finish breaking down when spring comes.

Should I add ground limestone, soil, or fertilizer?
A perfectly good compost pile can be built out of nothing fancier than leaves and grass clippings. Lime will balance out the pH of a pile of highly acidic materials, like pine needles. However, most compost is naturally close to a neutral pH by the time it is ready for use. A scattering of soil should be added if your compost isn't in contact with the ground, because it is the soil organisms that do the decomposing work. With a variety of ingredients, fertilizer is seldom necessary.

What if the compost pile doesn't heat up?
The odds are that an inactive compost pile just doesn't have enough "greens" in it to start its temperature rising. The answer is to rebuild the pile with more high-nitrogen materials or a "starter" like manure "tea." That will probably solve the problem, but also check that the pile is as moist as a wrung-out sponge.

How do I compost with too many high-nitrogen materials?
You can dig extra "greens" directly into the soil, store some in a sealed container, buy straw or sawdust to mix with it, or dry some in the sun to decrease the nitrogen content.

How do I compost with too many high-carbon materials?
This is often a problem in autumn when there's no shortage of dead leaves. If you have space, bag some and store them for covering up the food scraps you'll add through the winter, or for spring and summer when "browns" are harder to find. Bags of leaves also make insulating windbreaks for compost bins. Another option is to moisten the leaves and store them in sealed bags to begin decomposing. In spring, add them to the compost. Mulching is another alternative, but shred the leaves finely. And again, a composting neighbor might be able to use your surplus.

When is compost "finished" and safe to use?
When an active compost pile fails to heat up once more, and very little of the original material can be recognized, the compost is ready to use. It will be the rich brown color of good soil and smell something like the humus of a forest floor.

Do I need to fertilize if I use compost?
The nutritional value of compost depends on the materials that were used to make it–one very good reason for putting as much variety into the pile as possible. If you're trying to enrich a severely depleted garden plot, or growing plants like peonies that demand a lot of food, you might want to add some commercially produced organic fertilizer. Soil testing is a good idea in this case. For most gardens and flower beds, however, compost provides a concentrated source of balanced nutrients, as well as the organic matter the soil needs.

Source: New Brunswick Department of the Environment, "Black Magic, The Composting Handbook"

tion." Rats are probably the least-wanted guests of all. With a hospitable environment and plenty of food, their numbers increase quickly and they may become transmitters of disease. So, it is important to compost food wastes by burying them in the garden, in rodent-proof worm bins, or in hot compost piles. Always keep high-protein and fatty food wastes out of the compost pile (meat and fish scraps, bones, cheeses, butter, and other dairy products).

Many flies, including house flies, can spend their larval phase as maggots in decomposing food wastes. Though they play an important part in the breaking down of all types of organic debris, they are unwanted guests around human households. There are several ways to control their numbers: frequently turn compost piles that contain food (larvae die at high temperatures); cover piles with a dry material that has a high carbon content, such as straw or old grass clippings; or avoiding composting food wastes in yard waste piles.

c. Carbon-to-Nitrogen Ratios: "Greens" and "Browns"

All living organisms are made up of large amounts of the element carbon (C) combined with smaller amounts of nitrogen (N). The balance of these elements in a material is called the **carbon-to-nitrogen ratio** (C:N). This ratio is an important factor in determining how easily bacteria can decompose an organic waste. The micro-organisms in compost use carbon for energy and nitrogen for protein synthesis. The proportion of these two elements used by the bacteria averages about 30 parts carbon to 1 part nitrogen. Given a steady diet at this 30:1 ratio, they can work on organic material very quickly.

Most materials available for composting do not have this ratio, so to speed-up composting, our job is to balance the numbers. For instance, a mixture containing equal parts of brown tree leaves (40:1 ratio) and grass clippings (20:1 ratio) would have the ideal 30:1 ratio. This will work best on a weight, not volume, basis. Mixing materials of different sizes and textures also helps to provide a well-drained and well-aerated compost pile.

The C:N ratios listed in *Table III-5* are only guidelines; they are not accurate for every material of that type. For instance brown grass clippings from a poorly kept lawn will have far less nitrogen content than lush green clippings from an abundantly fertilized lawn. Also, the leaves from different types of trees vary in the C:N balance. It helps to think of materials high in nitrogen as "Greens," and woody, carbon-rich material as “Browns.”

Table III-5. Average Carbon:Nitrogen Ratios for Organic Materials

High Nitrogen Materials:	**C:N**
Grass Clippings	19:1
Sewage Sludge (digested)	16:1
Food Wastes	15:1
Cow Manure	20:1
Horse Manure	25:1
High Carbon Materials:	**C:N**
Leaves and Foliage	40-80:1
Bark	100-130:1
Paper	170:1
Wood and Sawdust	300-700:1

The best way to become familiar with this balancing is to be specific about it at first, then relax into an intuitive assessment of what a pile needs. Some people like to think in terms of half brown and half green material when building a compost pile out of kitchen and yard wastes. While this may not give the optimum C:N balance, it is a useful rule of thumb for those new to composting and not familiar with the materials.

It can be thought of like a chef varying the ingredients for a recipe. Be curious, write down the type and quantity of materials used, and take note of the temperature the pile reaches and the quality of the finished compost. After a while, the process becomes no more technical than making a cake.

Actually, building a compost pile is often compared to making a layer cake. Materials can be

added in 2- to 6-inch layers. Water and amendments can be added between layers, like frosting. Alternating layers of "greens" and "browns" helps to proportion carbon and nitrogen throughout the pile. After two layers are placed, they should be mixed together. This ensures speedy multiplication of bacteria.

A pile that is *too high in carbon* will stay cool and sit a long time without breaking down. A pile *too high in nitrogen* will give off the smell of ammonia gas, and is also likely to get slimy and have a foul odor. The decomposition process is working on everything organic, and with time to wait and space to keep these materials, eventually the reward will be compost.

d. Surface Area

A melting block of ice is a great analogy for organic materials in compost. When the block is large it melts quite slowly, but when it is broken into smaller pieces the surface area increases, and the melting increases. Similarly, when organic materials are chopped or shredded into smaller pieces, the composting process speeds up. With more surface area exposed, decomposer bacteria have more food easily available so they can reproduce and grow more quickly.

It is not essential to break organic materials into small pieces to compost them, it just speeds the process. Sometimes, such as when using **mulches**, slow decomposition is advantageous. It can certainly be less work!

Mulches are organic materials placed on the soil

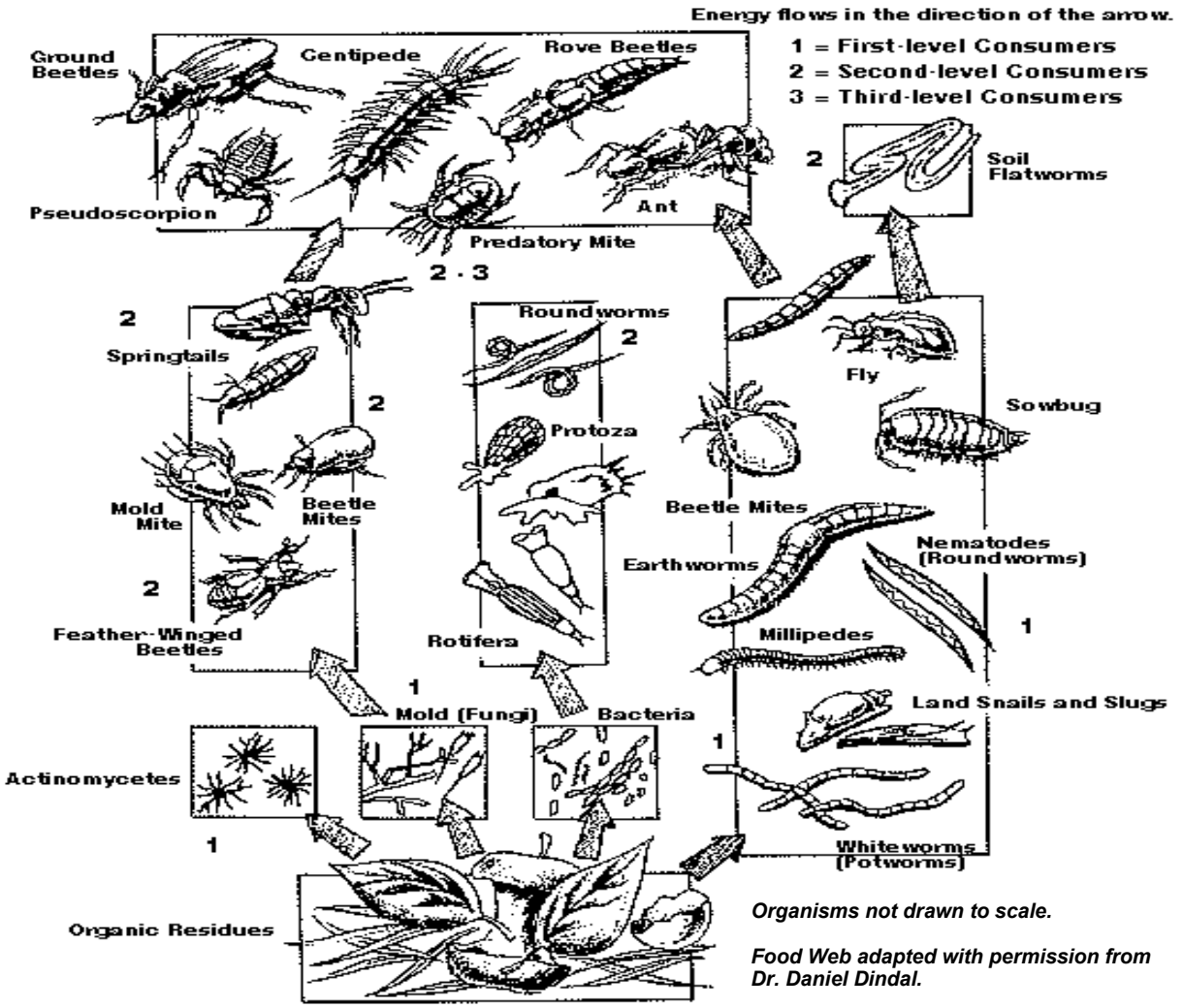

Figure III-10. Food web at the compost pile. (Source: The Ecology of Compost, Daniel Dindal,

surface to control weeds, lessen evaporation, and stop soil erosion. Wood chips and sawdust are commonly used as mulches. As they weather and slowly break down, they save water, labor, soil, and money.
If coarse materials are run through a shredder until only small bits remain, much more surface area is exposed for micro-organisms to work on. This allows decomposer organisms to digest more material and multiply faster, generating more heat. Any coarse, woody materials added to compost piles should be chopped, shredded, split, or bruised to speed the rotting process.

Many types of shredders and chippers are available, from large models used by tree services to small hand-cranked types. Some homeowners are finding it appropriate to purchase a small electric model jointly with their neighbors. A rotary lawn mower with its bag removed can be used to shred leaves on a hard surface, such as a driveway. This is managed best by blowing the yard debris against a wall.

If a simpler technology is desired, coarse yard wastes can be chopped with a machete on a piece of plywood. Even some pounding with the back of a hatchet will create entry ways for decomposer organisms.

e. Moisture and Aeration

All life on earth needs a certain amount of water and air to sustain itself. The compost pile is no different. The amounts of air and water in a compost pile form a delicate balance that must be maintained for rapid decomposition to take place. At less than 40 percent moisture, the bacteria are slowed by the lack of water. At greater than 60 percent moisture, there is not enough air for aerobic decomposition and anaerobic bacteria can take over the pile.

Viewed as a micro-organism farm, the moisture needs of the pile may need to be tended to just as the farmer tends to the irrigation of crops. Fortunately, there is a simple rule of thumb: compost should be about as moist as a wrung-out sponge. It should be obviously moist to the touch, but yield no liquid when squeezed. This level of moisture provides a thin film of water on materials for the decomposer organisms while still allowing air into their surroundings.

If the pile is too wet, it should be turned (pulled apart and restacked). This will allow air back into the pile and loosen up the materials for better draining. A pitchfork is the best tool for turning compost piles. Shovels are not very useful for picking up loose, mixed yard waste.

If the pile is too dry, it can be soaked from above with a trickling hose. However, a more effective practice is to turn the pile and re-wet the materials in the process. Once dry, certain materials such as dead leaves, sawdust, hay, straw, and some dried weeds and vegetables will shed water or absorb it only on their surface. These dry materials must be gradually wetted until they glisten with moisture. Then they should be mixed until the water has been absorbed into their fibers.

f. Volume

A pile should be large enough to hold heat and small enough to admit air to the center. As a rule of thumb, the *minimum* dimensions of a pile should be 3ft by 3ft to hold heat. The *maximum* dimensions that will allow air to the center of the pile are 5ft by 5ft by any length.

There are ways around this rule of thumb. By insulating the sides of the pile, higher temperatures can be maintained in a much smaller volume. Although labor-intensive, it works. By turning a pile or using "ventilation stacks" in the center of the pile, dimensions larger than 5 feet wide are possible. However, a pile this large is unnecessary in most backyard situations.

g. Time and Temperature

The hotter the pile, the faster the composting process. Temperature is dependent on many factors: carbon to nitrogen ratios, surface area, moisture content, and aeration. Also, remember that only fresh materials will heat up. With proper consideration of these temperatures, piles can be built and the composting process is quicker.

If time is less important, a cooler, slower pile can be built with less attention given to the details of materials used and the environment provided for them. This low-maintenance method of composting will still create an excellent compost.

h. Compost Benefits

Most of the wastes that made up the pile are no longer recognizable in the finished compost, with the exception of some persistent, woody parts. What remains is dark, loose, crumbly material that resembles rich soil. The volume of the finished compost has been reduced by about 30 to 50 percent because of biochemical breakdown and water respiration. The compost is now ready to be used for growing new plants and beginning the cycle over again.

Compost will improve the quality of almost any soil. The main benefit is to improve the "structure" of the soil. The structure of a soil determines its ability to drain well, store adequate moisture, and meet the many needs of healthy plants. Although compost provides important nutrients, it is not a substitute for fertilizers. More important than the nutrients supplied by compost, is its ability to make existing nutrients more easily available to plants.

Soil Structure

The value of compost as a soil amendment is suggested by its appearance. Even a casual observation of soil amended with compost shows that it is made up of many round, irregular "aggregates." Aggregates are groups of particles loosely bound together by the secretions of worms and compost bacteria. If these aggregates are rubbed between a finger and thumb, they break down into smaller aggregates. In between and within the aggregates themselves are many small air channels like the empty spaces left in a jar of marbles.

A well-structured soil with lots of small aggregates stays loose and easy to cultivate. The channels that aggregates create through the soil allow plant roots and moisture to penetrate easily. The smaller pores within the aggregates loosely hold moisture until a plant needs it. The larger pore spaces between the aggregates allow excess water to drain out and air to circulate and warm the soil.

By encouraging the formation of aggregates, compost improves the structure of every type of soil: silt, sand, or clay. In loose sandy soils, compost helps to bind unconsolidated particles together to retain water and nutrients that would normally wash right through. Added to a clay or silt soil, compost breaks up the small tightly bound particles and forms larger aggregations, which allow water to drain and air to penetrate.

Nutrient Content

Dark, loose compost looks like it should be rich in nutrients. Indeed, compost contains a variety of the basic nutrients that plants require for healthy growth. Of special importance are the micro-nutrients present in compost, such as iron, manganese, copper, and zinc. They are only needed in small doses, like vitamins in our diet, but without them plants have difficulty extracting nutrients from other foods. Micro-nutrients are often absent from commercial fertilizers, so compost is an essential dietary supplement in any soil.

Compost also contains small amounts of the macro-nutrients that plants need in larger doses. Macro-nutrients include nitrogen, phosphorous, potassium, calcium, and magnesium. These nutrients are usually applied in measured amounts through commercial fertilizers and lime. The three numbers listed on fertilizer bags (e.g., 10-10-10) refer to the percentage of the three primary macro-nutrients available in the fertilizer--nitrogen, phosphorous, and potassium (N-P-K).

Although compost generally contains small amounts of these macro-nutrients, they are typically present in forms that are not readily available to plants. When applied in 4- to 6-inch layers, compost may provide significant amounts of these nutrients. However, due to the variability and slow release of major nutrients, compost is considered a supplement to fertilization with more reliable nutrient sources.

Nutrient Storage And Availability

Understanding how compost is able to store nutrients and make them available when needed by plants requires a closer look. When viewing compost through a microscope that enlarges things 1,000 times, individual compost particles resemble aggregates that are not observed with the unaided eye. Like the aggregates, individual particles of compost contain many porous channels. Just as the channels in the aggregates provide space to store water, these spaces in compost particles provide spaces to store nutrients.

The sides of the channels provide vast surfaces inside the particles where individual ions of minerals and fertilizers can cling. These ions are given up to plant roots as the plants require them. Thus, compost is able to store nutrients that might otherwise wash through a sandy soil or be locked up in spaces of a clay soil.

The ions clinging to the surfaces of our compost particles tend to be those that give soil a "neutral" pH. A measure of soil acidity or alkalinity is its pH. The acidity or alkalinity of a soil affects the availability of nutrients to plants. Most important plant nutrients are relatively easily available to plants at a pH range of 5.5 to 7.5. At pH levels above this range (alkaline) or below this range (acid), essential nutrients become chemically bound in the soil and are unavailable to plants. Yard debris compost typically has a pH range of 5.5 to 7.5. When mixed into soil, this compost will help keep the pH at optimum levels for nutrient availability.

Beneficial Soil Life

Taking a step back from the microscopic view, another beneficial characteristic of compost is evident. The presence of red worms, centipedes, sow bugs, and others show that compost is a healthy living material.

The presence of decomposer organisms means that there is still some organic material being slowly broken down and releasing nutrients. They are also indicators of a balanced soil ecology, which includes organisms that keep diseases and pests in check. Many experiments have shown that the rich soil life in compost helps to control diseases and pests that might otherwise overrun a more sterile soil lacking natural checks against their spread.

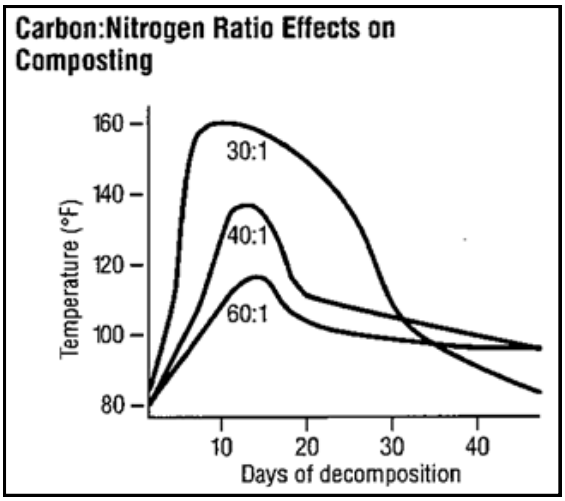

Figure III-11. Carbon:Nitrogen ratio effects on composting.

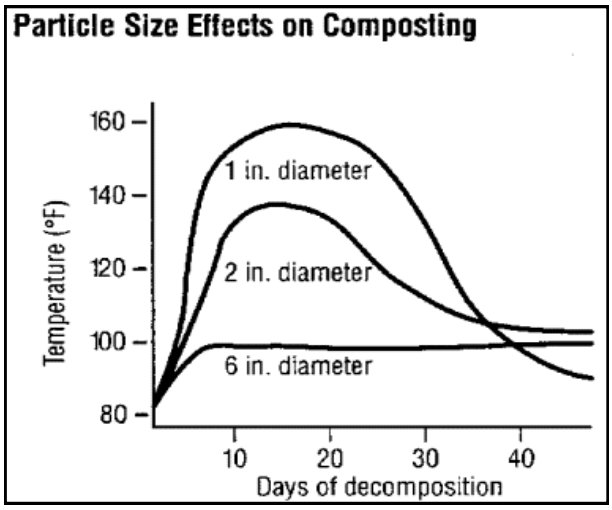

Figure III-12. Particle size effects on composting.

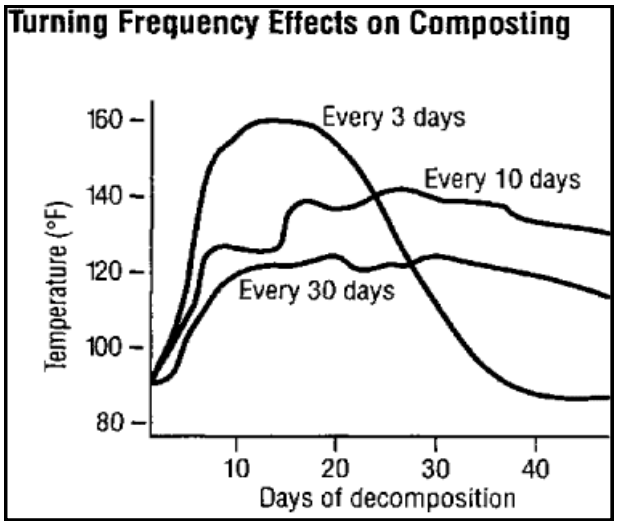

Figure III-13. Turning frequency effects on composting.

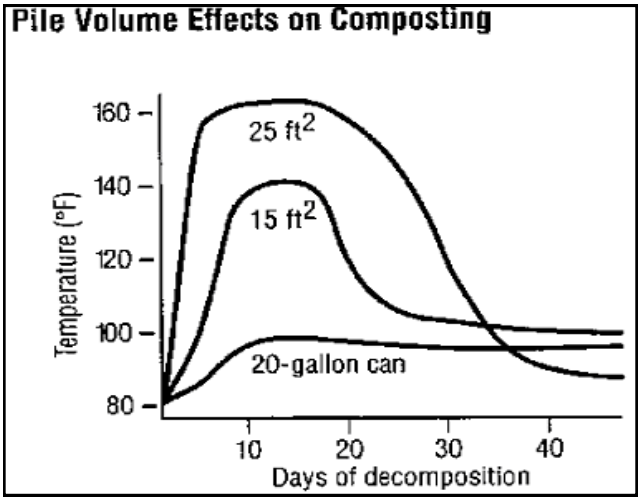

Figure III-14. Pile volume effects on composting.

Chapter III
Composting and Vermicomposting

Redirecting Food Waste

PREFLECTION – Acknowledge food waste

What types of food waste are generated in your kitchen (from prep, spoiled in the frig, uneaten)?
In your household, what volume of food waste is generated in a week?
How is food waste handled in your work or volunteer setting?

ACTION – Explore composting and vermicomposting options.

Talk with friends, family, or co-workers until you find someone who can share first hand composting experience with you.
Analyze your own living situation (single-family dwelling, apartment, town home) and determine if a composter/worm bin has a place.
Visit a garden or home improvement store and investigate composter/worm bin styles.
Call your waste management company about options other than composting at home.

REFLECTION – Ask yourself these questions:

Who are the beneficiaries of composting?
Am I more drawn to traditional composting or vermicomposting?
What would be different in my life if I composted?
How would others in my household be impacted if we started composting?
If I don't want to compost, what changes do I need to make in my life?

RE-ACTION – Make simple changes to reduce waste.

Set an achievable goal (e.g. take leftovers to work for lunch one more day a week) for reduction of food waste at home.
Suggest options in your work or volunteer setting about reduction and/or handling of food waste.

INVOLVE YOUR CHILDREN

If you have a kitchen scale, scrape all food waste together at the end of a meal and weigh it.
If you don't have a scale, put it in a flat bottomed bowl and use a ruler to measure how high it comes up the side.
Don't forget to measure the fuzzy green stuff you forgot to eat for 2 weeks!
Keep a running tally for a week and multiply it out for a year.